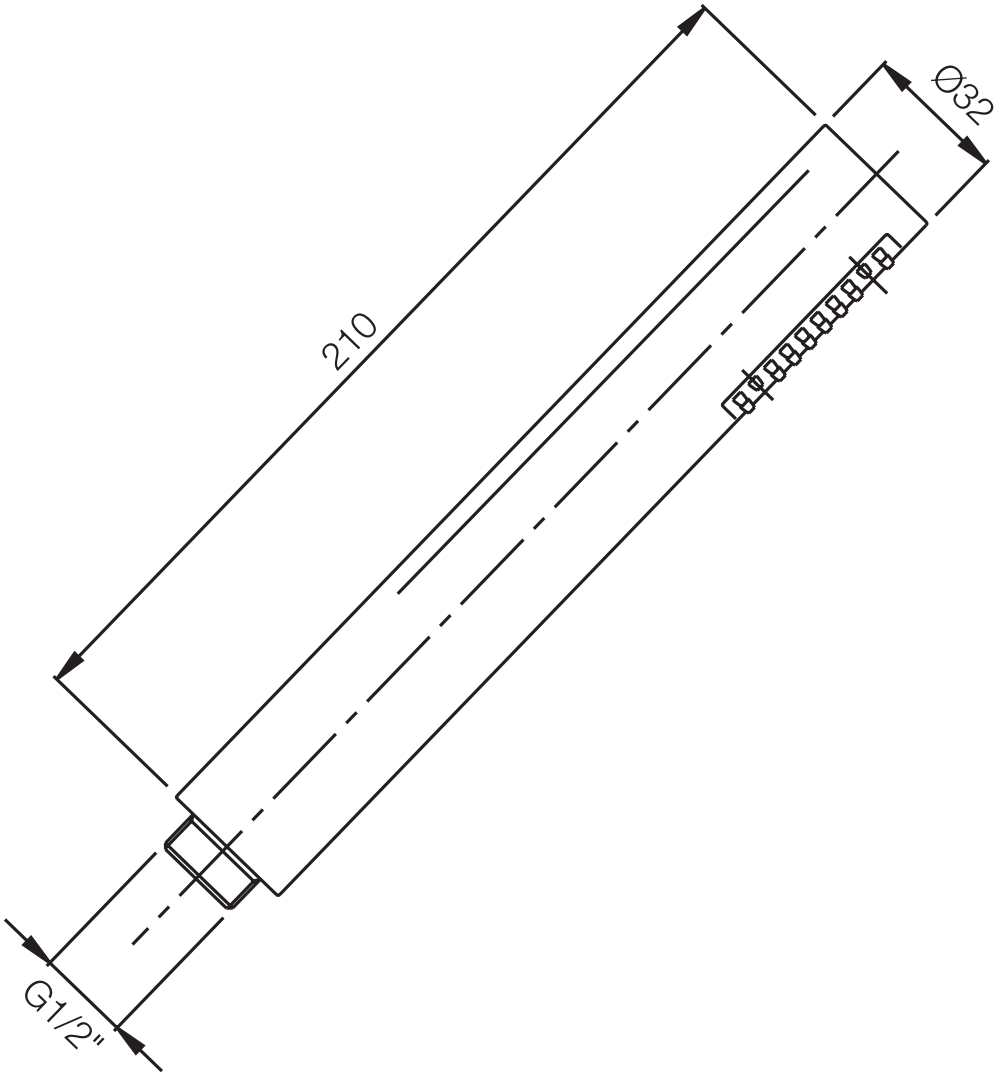
210
Ø32
G1/2"