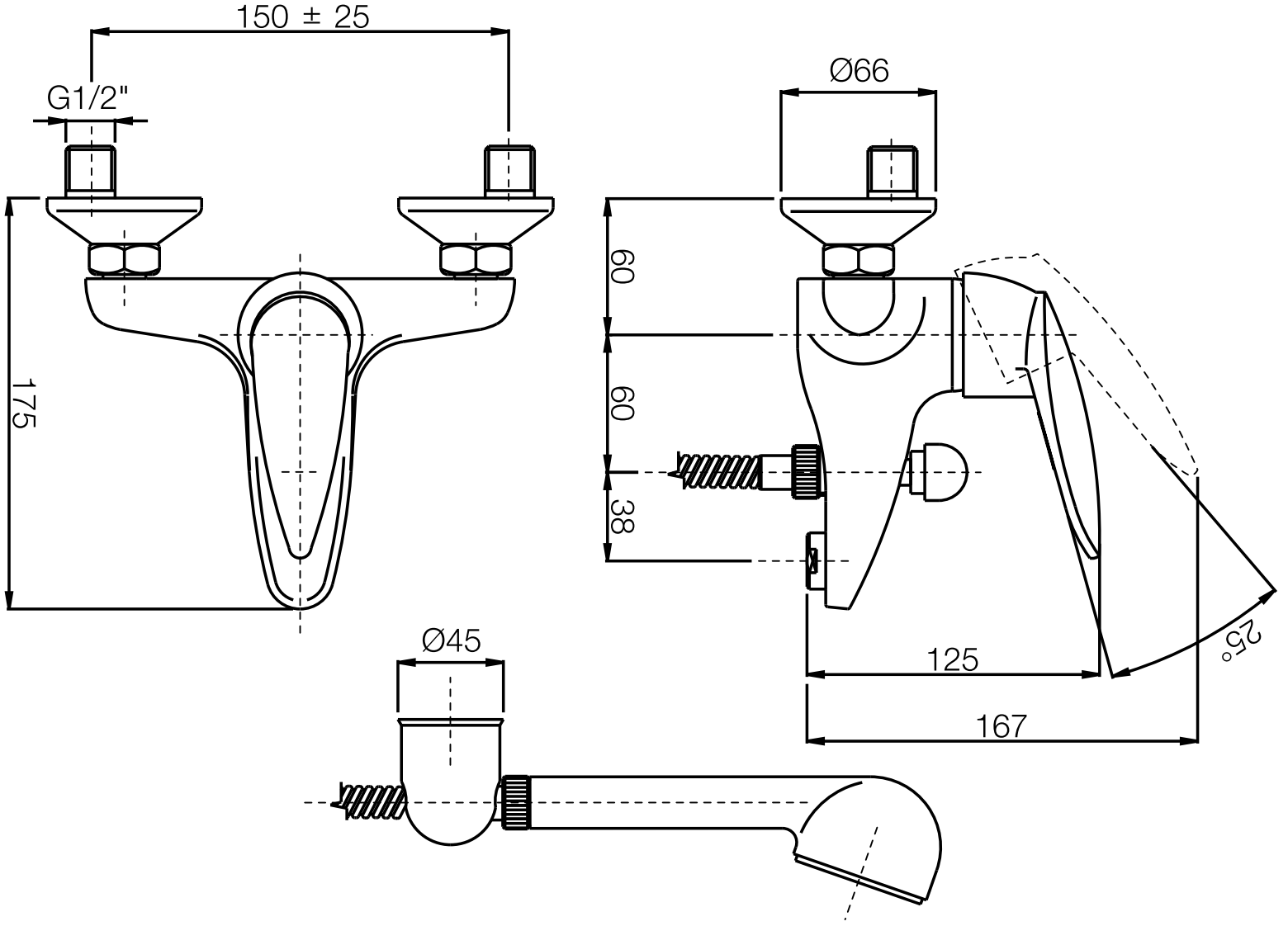
150 ± 25
G1/2"
175
Ø66
60
60
38
125
167
25°
Ø45