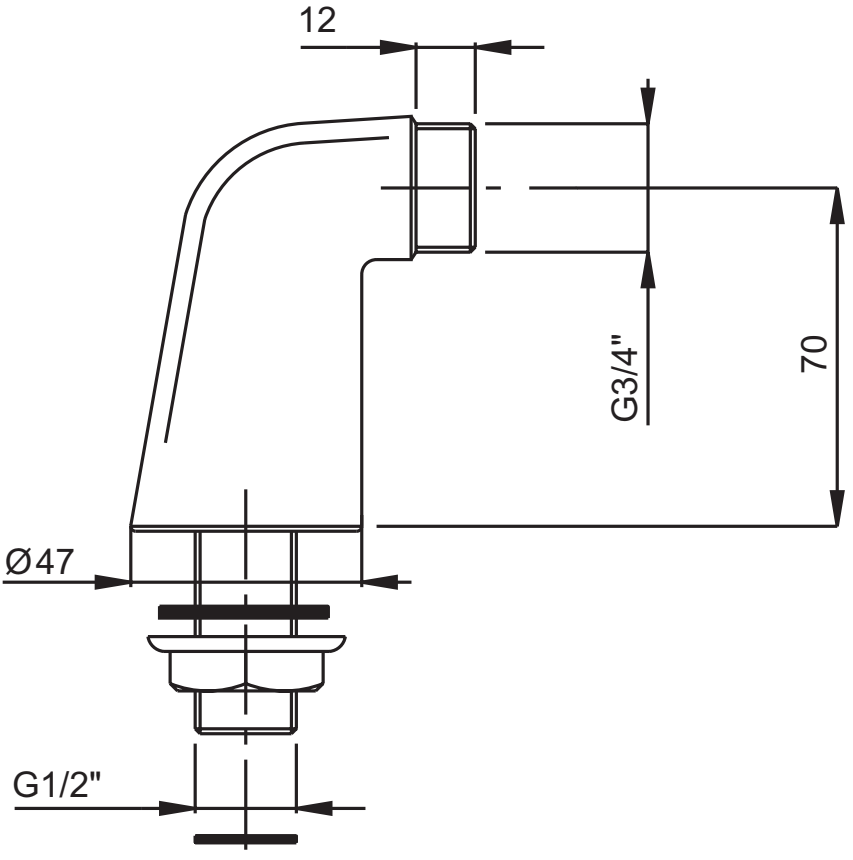
12
G3/4"
70
Ø47
G1/2"